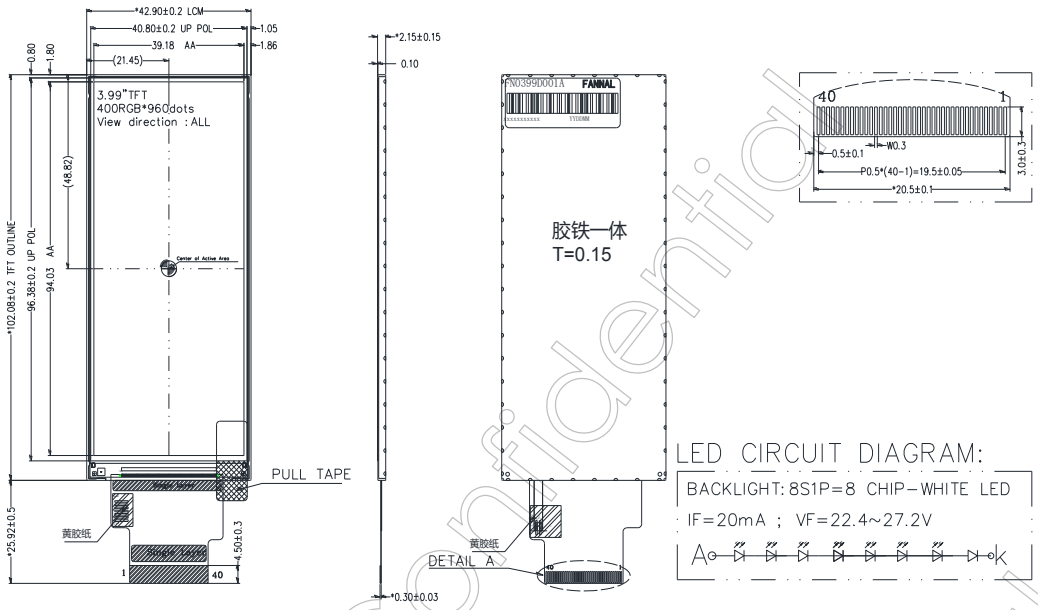

Parameter	Specification	Unit
LCD size	3.99 (Diagonal)	inch
Resolution Ratio	400(H)×960(V)	pixels
Pixel Pitch	0.09795(H)x0.09795(V)	mm
Active Area	39.18(H)×94.032(V)	mm
Module Size	42.9(W)×102.08(H)×2.15(D)	mm
Display Mode	Normally Black, Transmissive	
Interface	SPI/RGB 18bit	
Pixel arrangement	RGB-Stripe	
View Direction	ALL	O´clock
Power Supply	2.8	V
Power Consumption	0.7(Typ.)	W
Weight	20(Typ.)	g
Luminance	350(Typ.)	cd/m²
Driver IC	ST7701SN	
Operating Temperature	-20~+70	℃
Storage Temperature	-30~+80	℃

Parameter	Symbol	Min.	Typ.	Max.	Unit
Supply Voltage	VDD	2.5	2.8	3.6	V
Digital interface supple Voltage	VDDI	1.65	1.8	3.3	V
Normal mode Current consumption	IDD	-	-	50	mA
Level input voltage	VIH	0.7VDDI		VDDI	V
	VIL	GND		0.3VDDI	V
Level output voltage	VOH	0.8VDDI		VDDI	V
	VOL	GND		0.2VDDI	V

Pin No.	Symbol	I/O	Description
1	LEDA	P	Power supply for LED anode input.
2	LEDK1	P	Power supply for LED cathode input.
3	LEDK2	P	Power supply for LED cathode input.
4	GND	P	Ground.
5	VDD	P	Supply analog voltage.
6	RESET	I	Reset signal input.
7-8	NC	-	No connection.
9	SDA	I	Serial data input signal.
10	SCL	I	Pixel clock input signal.
11	CS	I	Chip selection signal.
12	DCLK	I	RGB dot clock signal..
13	DE	I	Data enable signal input.
14	VSYNC	I	Vertical synchronizing signal input.
15	HSYNC	I	Horizontal synchronizing signal input.
16-33	DB0-DB17	I	RGB data signal: DB0:Blue LSB--DB5:Blue MSB; DB6:Green LSB--DB11:Green MSB; DB12:Red LSB--DB17:Red MSB.
34	GND	P	Ground.
35	TP_INT	I	Touch Interrupt, Not connection.
36	TP_SDA	I	Touch IIC Data signal, Not connection.
37	TP_SCL	I	Touch IIC Clock signal, Not connection.
38	TP_RESET	I	Touch Reset signal, Not connection.
39	TP_VCI	P	Touch Power supply, Not connection.
40	GND	P	Power Ground.

Parameter	Symbol	Min.	Typ.	Max.	Unit
Forward Current Voltage	VF	22.4	24.8	27.2	V
Forward Current	If	-	20	-	mA
Backlight Power Consumption	Wbl	-	0.496	-	W
LED Lifetime	-	30000			Hrs

FANNAL Confidential